EZ BOX® New Work Switch & Outlet Boxes

CANTEX®

EZ BOX® New Work Switch and Outlet Box with Screw-Nails

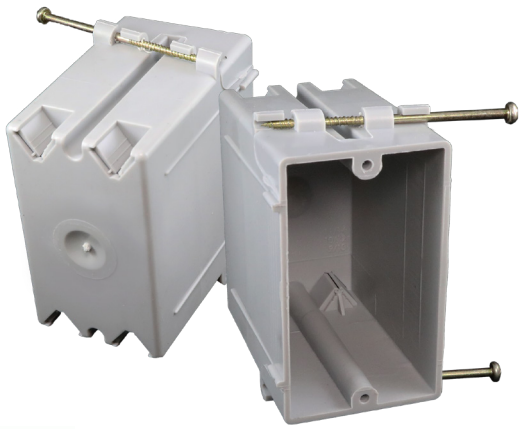

2 hour fire-rated

EZ18SNZ, EZ20SNZ & EZ23SNZ are 1-gang electrical switch and outlet boxes for residential or light commercial electrical installations. They feature v-clamps for EZ wiring and screw-nails for use on aluminum, light to medium grade steel or wood studs. The sharp point, slotted head and threaded body allow for EZ installation with a power screwdriver without pre-drilling.

- Can also be installed on wood studs using a hammer
- Designed to work with most standard 1-gang devices and switches
- Attached screw-nails for mounting included
- Engineered for easy, cost saving installation and constructed with resilient PVC for durability
- ETL Listed, ETL 2 Hour Fire-rated
- Made in USA

18 Cubic Inch

Part Number	Carton Quantity	Height	Width	Depth
EZ18SNZ	100	3.700	2.250	2.875

Dimensions are nominal

20.3 Cubic Inch

Part Number	Carton Quantity	Height	Width	Depth
EZ20SNZ	100	3.700	2.250	3.125

Dimensions are nominal

23 Cubic Inch

Part Number	Carton Quantity	Height	Width	Depth
EZ23SNZ	100	3.700	2.250	3.500

Dimensions are nominal

Features 4 V-clamps for EZ & secure wiring

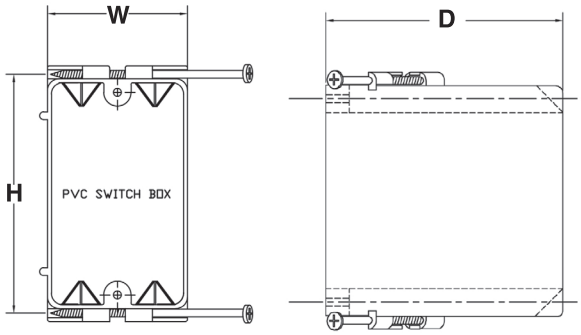

The CANTEX EZ BOX® Line

The CANTEX EZ BOX® line offers a complete selection of non-metallic electrical switch, outlet and ceiling boxes in multiple sizes and styles to meet all your new construction and renovation project needs. Whether you need EZ nail-on, single-gang boxes with enhanced angled nails for installation between studs or adjustable EZ BOXES with adjustable brackets for the perfect fit on tile backsplashes, CANTEX has your solution. EZ BOXES are easy to install, long-wearing, and maintenance-free. CANTEX offers almost 100 styles of EZ BOXES in multiple sizes and gang applications to meet all of your new and old work project needs. You can choose from one of our many wall, ceiling or ceiling fan boxes.

CANTEX EZ BOXES are all either ETL or UL listed for use as in Article 314 of the National Electrical code. They are also 2-hour fire-rated when applicable. Plus, the CANTEX EZ Box line is backed by over 60 years of experience manufacturing unrivaled American-made electrical products.